PRIVATE CLOUD HOST SERVER – PHYSICAL CONNECTIVITY DIAGRAM

Dell PowerEdge R670 – Dual Host Configuration

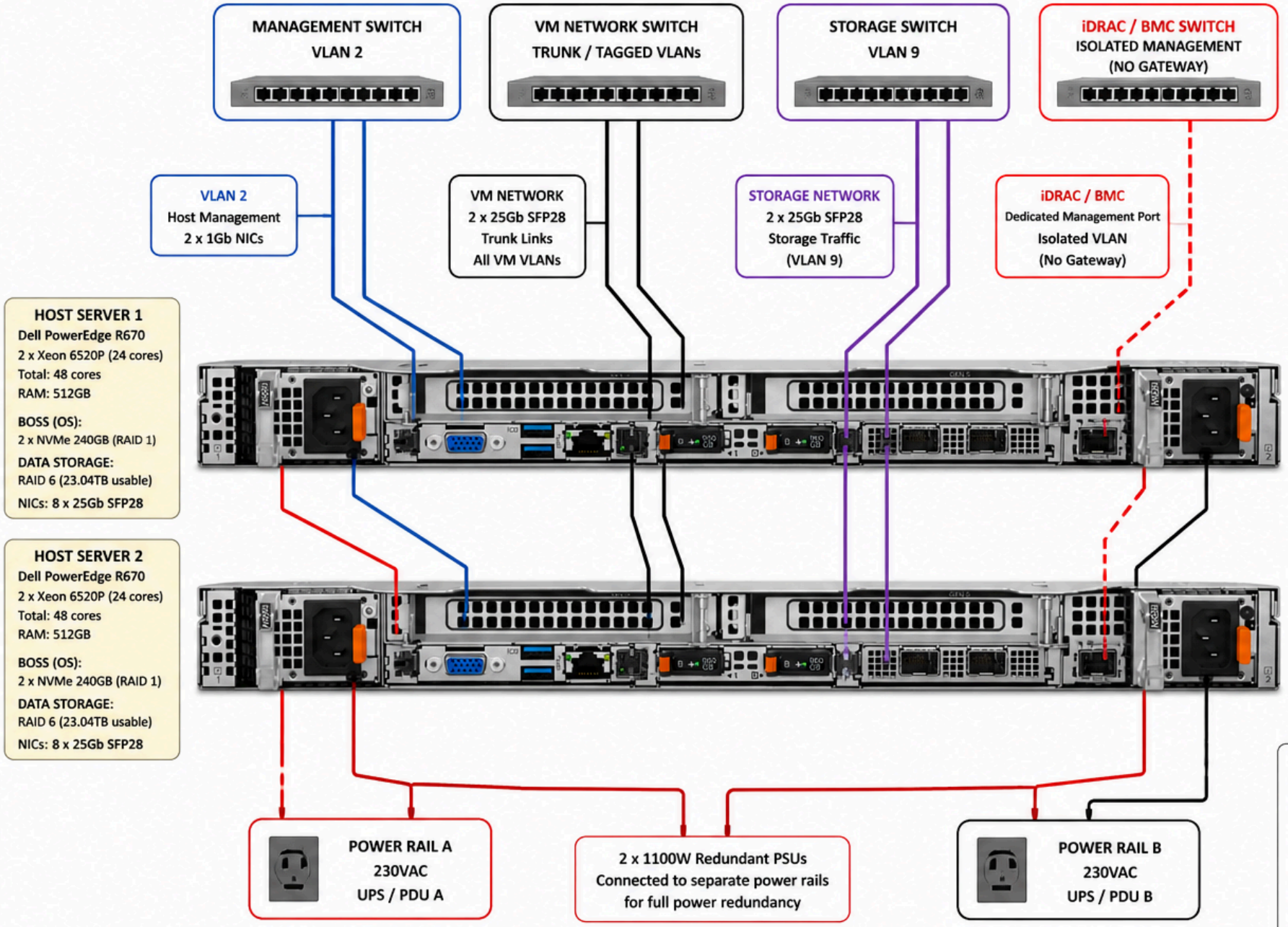

NOTES:

1. Two identical host servers are deployed for redundancy.
2. Each server is sized to run the full workload independently.
3. VLAN 2 is used for host management traffic.
4. VM traffic is carried over SFP28 trunk links allowing multiple VLANs.
5. Storage traffic is separated on VLAN 9 to improve performance and reduce congestion.
6. iDRAC/BMC is placed on an isolated VLAN with no gateway for enhanced security.
7. Dual 1100W hot-plug PSUs provide power redundancy.
8. BOSS drives are configured in RAID 1 for OS protection.
9. Data drives are configured in RAID 6 with 23.04TB usable capacity for fault tolerance.
10. All servers, network equipment and PDUs are rack mounted.

CABLE / CONNECTION LEGEND

- Management (VLAN 2) – 1Gb
- VM Network (Trunk) – 25Gb SFP28
- Storage (VLAN 9) – 25Gb SFP28
- iDRAC / BMC Management – 1Gb
- Power Rail A – 230VAC
- Power Rail B – 230VAC